APPENDIX 2

Lesson Quizzes and Answer Key

QUIZ Lesson 2
Major Equipment

1. What is the best definition of a prototype?
   a. working model
   b. imitation
   c. best try
   d. finished product
2. What is the best definition of an insulator?
   a. passes electrons
   b. does not pass electrons
   c. has free electrons
   d. usually metallic
3. What is the best definition of a conductor?
   a. passes electrons
   b. does not pass electrons
   c. has no free electrons
   d. made of wood
4. A wire connected into point B8 is connected to
   a. point A6
   b. point B7
   c. point C8
   d. point D9
5. The "power line" on the side of the solderless breadboard is made of two long metal strips, making power available all along the solderless breadboard.
   a. True
   b. False
6. What happens when you check continuity with your DMM and it beeeeeeps?
   a. A very high resistance is indicated.
   b. Very little current gets through.
   c. The two probes are touching.
   d. It indicates that electrons move easily between the probes.

QUIZ Lesson 3
Your First Circuit

1. What is the best definition of a diode?
   a. pushes current through a circuit
   b. protects the solderless breadboard
   c. gives off light when turned on
   d. allows voltage to pass through only one way

2. How do you identify which way to put the diode into the circuit?

Figure A2-1

a. The gray line points away from the voltage source.

b. The gray line points towards the voltage source.

3. What does LED stand for?

a. light-evading dork

b. light-emersed disk

c. light-emitting diode

4. Relate the diode symbol to the picture of the diode.

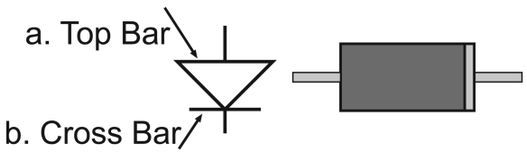

Figure A2-2

a. The top line relates to the gray band on the diode.

b. The cross bar relates to the gray band on the diode.

5. Identify the negative side of the LED.

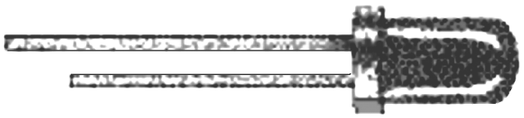

Figure A2-3

a. long leg

b. round edge

c. flat edge

d. smooth top

6. Positive is the red line on the solderless breadboard.

a. True

b. False

7. How does the diode in the solderless breadboard protect your circuit?

a. Diodes are a one-way street.

b. LEDs are diodes.

c. It ensures the power supply is always hooked up properly.

d. Current flows through the diode.

8. The power rail (V+) on the solderless breadboard should always be facing the top, just like it is shown on the schematic.

a. True

b. False

9. Voltage is always shown at the top of a schematic.

a. True

b. False

10. What is the best definition of a schematic?

a. a symbolic representation of a circuit

b. a picture representation of a circuit

11. What does a resistor do?
    a. stores electrons
    b. resists the flow of electrons
    c. transfers electrons along the wire
    d. acts as a one-way street
12. How does the first diode protect the circuit?
    a. keeps you from putting in parts backwards
    b. keeps the power supply from providing too much voltage
    c. helps remind you where the wires go
    d. makes sure the current and voltage are always traveling the right way
13. What does it mean when your red or green LED turns a bright yellow?
    a. The LED is working.
    b. It has too much power and will burn out.
14. What is the total voltage used across the entire circuit?
    a. more voltage than the power source provides
    b. less voltage than the power source provides
    c. equals the voltage that the power source provides
15. The amount of voltage used from V+ to ground is always the amount of voltage available.
    a. True
    b. False

QUIZ Lesson 4
Reading Resistors

1. The last band on the resistors we use is always gold.
    a. True
    b. False
2. If the first band is brown, the resistor's value starts with the number
    a. 1
    b. 2
    c. 3
    d. 4
3. If the first two bands are red-red, the value is
    a. 11
    b. 22
    c. 33
    d. 44
4. k stands for what number unit?
    a. millions
    b. hundred thousands
    c. ten thousands
    d. thousands
5. 10K ohms is the same as
    a. 10 ohms
    b. 100 ohms
    c. 1,000 ohms
    d. 10,000 ohms
6. 4.7M ohms is the same as
    a. 47,000 ohms
    b. 4,700 ohms
    c. 47,000,000 ohms
    d. 4,700,000 ohms
7. The higher the value of resistance, the more current passes through.
    a. True
    b. False
8. A red-red-orange can be used in place of a red-red-green in any circuit.
    a. True
    b. False

9. The third band is the most important value marker.
   a. True
   b. False
10. Having the right value resistor in a circuit is important.
   a. True
   b. False
11. A resistor that has the markings brown-red-orange-gold has what value?
   a. 123 ohms (give or take 5%)
   b. 12,000 ohms (give or take 5%)
   c. 321 ohms (give or take 5%)
   d. 320 ohms (give or take 5%)
12. A resistor that has the markings gold-green-violet-yellow has the value
   a. 4,700,000 ohms
   b. 570,000 ohms
   c. 475 ohms
   d. 574 ohms

QUIZ Lessons 5, 6, and 7

Resistor Effects and Potentiometers

1. R1 is being replaced by different resistor values. Place the pictures in order from greatest to least resistance, as shown by the amount of voltage used by R1 (see Figure A2-4).
   a. [A C B D]
   b. [B A D C]
   c. [D C A B]
   d. [C D A B]
2. What happened as the resistance in your circuit increased?
   a. The resistor used more voltage and the LED got brighter.
   b. The resistor used less voltage and the LED got brighter.
   c. The resistor used less voltage and the LED got dimmer.
   d. The resistor used more voltage and the LED got dimmer.
3. The resistor value between the outer legs A and B is always equal the maximum rating of the potentiometer.
   a. True
   b. False

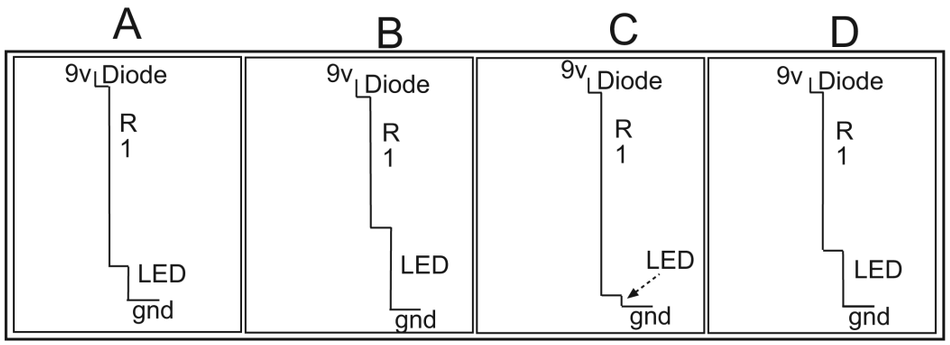

Figure A2-4

4. As the slide connecting legs A and C gets closer together, the
   a. volume goes up
   b. resistance between the legs goes down
   c. resistance between the legs goes up
   d. volume goes down
5. Why is there a fixed resistor in this circuit?
   a. This is part of an exercise to make the circuit more difficult.
   b. The LED cannot operate without a resistor.
   c. The resistor value between legs A and C can go to 100k ohms. The fixed resistor is needed to provide more voltage to the LED.
   d. The resistor value between legs A and C can go to 00.0 ohms. This would put 9 v+ directly to the LED and burn it out.
6. How do you tell the value of a potentiometer?
   a. Measure it with the DMM.
   b. It should be stamped directly onto the case.
   c. Read the color code.
7. The resistance value between the outer legs A and B is adjustable.
   a. True
   b. False
8. You have a potentiometer rated at 100k ohms. The resistor value between legs A and C is 35 k ohms. What is the resistor value between legs A and B?
   a. 35,000 ohms
   b. 100,000 ohms
   c. 75,000 ohms
   d. 65,000 ohms
9. Why do we use the abbreviations k and M?
   a. easier than writing all those zeros
   b. to confuse people
   c. to make it look hard
10. State the relationship between the amount of light on the LDR and its resistance.
    a. The brighter the light, the less the resistance of the LDR.
    b. The darker the light, the less the resistance of the LDR.
    c. The brighter the light, the more resistance of the LDR.
11. Consider the following waterfall diagrams (Figure A2-5). What order would show the light-dependent resistor reaction in brightest light to dimmest light?
    a. 1 2 3 4
    b. 2 1 4 3
    c. 3 1 2 4
    d. 2 3 1 4

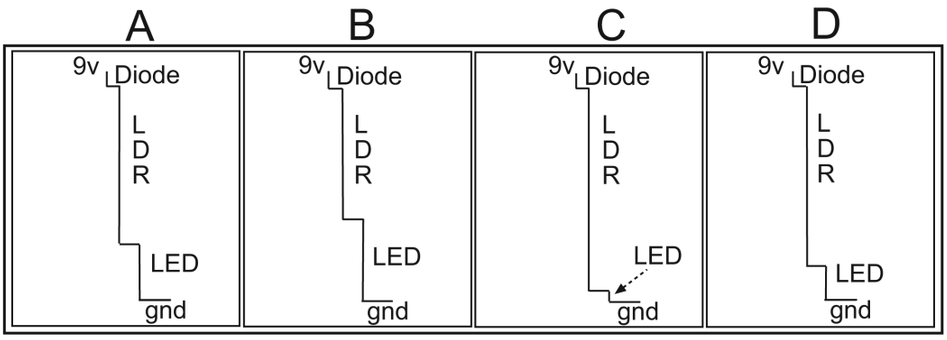

Figure A2-5

QUIZ Lesson 8
Capacitors and Push Buttons

1. Why do different capacitors have different colors?
   a. different values
   b. different manufacturers
   c. different voltage ratings
   d. different ranges
2. Electrolytic capacitors have the basic shape of a
   a. disc
   b. box
   c. can
   d. thimble
3. The prefix μ, "micro," represents
   a. thousandths
   b. millionths
   c. ten-thousandths
   d. billionths
4. 1 μF is read as
   a. 1 millifarad
   b. 1 macrofarad
   c. 1 microfarad
   d. 1 megafarad
5. The unit of a farad was developed
   a. 20 years ago
   b. 100 years ago
   c. 200 years ago
   d. 400 years ago
6. Electrolytic capacitors are polar. That means that if you put them in backwards, they will be damaged. What is the easiest way to tell which leg is towards the ground?
   a. marked by the longest leg
   b. marked by a big stripe down the side
   c. marked by the word "negative"
7. What is the best definition of a farad?
   a. a unit of electrical push
   b. a measuring unit of capacitance; the storage of a charge
   c. a measure of how much resistance
   d. a measure of how fast the electrons are moving
8. What is the best definition of a capacitor?
   a. a component that stores electrons temporarily
   b. a component that acts like a battery
   c. a component that creates a charge
   d. a component that provides voltage
9. The PBNO will pass current
   a. only when the plunger is pushed
   b. after the plunger is pushed and released
   c. when the plunger is not pushed
   d. until the plunger is pushed
10. The PBNC will pass current
    a. only when the plunger is pushed
    b. after the plunger is pushed and held down
    c. when the plunger is not pushed
11. Of the three types of capacitors, the disc capacitors hold the smallest amount of electric charge.
    a. True
    b. False

12. What happened in the last circuit you built for the exercise sheet, when you replaced the PBNO with the PBNC?
    a. There was no difference than when the PBNO was in.
    b. The LED was off when the power was connected, and turned on when the button was pushed.
    c. The LED turned on and stayed on, even when the button was pushed.
    d. The LED turned on when the power was connected, and dimmed when the button was pushed.

QUIZ Lesson 9
Introducing Transistors

1. Regarding the symbol for the transistor, the arrow is always on the emitter side.
    a. True
    b. False
2. The current moves in the direction the arrow is pointing.
    a. True
    b. False
3. The only way to tell the value of a transistor is to read its value on the flat face of the transistor.
    a. True
    b. False
4. What is the best definition of a transistor?
    a. has three legs
    b. provides power through the base
    c. turns on when the base is pushed
    d. basic electronic switch
5. Anything that looks like a transistor must be a transistor.
    a. True
    b. False
6. What is the best way to find the emitter for these transistors? With the flat face towards yourself,
    a. leg on the left is the emitter
    b. leg in the center is the emitter
    c. leg on the right is the emitter
7. What is the best way to find the base for these transistors? With the flat face towards yourself,
    a. leg on the left is the base
    b. leg in the center is the base
    c. leg on the right is the base
8. Describe the path the current travels to provide the power to the LED in the circuit you built for this exercise.
    a. V+ PB C1 R1 Q1 R2 LED
    b. V+ D1 PB R1 Q1 R2 LED
    c. V+ Q1 R2 LED
    d. V+ D1 Q1 R2 LED
9. Why does the LED stay on for so much longer in this circuit?
    a. The transistor uses much less power than the LED, so C1 drains slower.
    b. C1 is much bigger in this circuit so it powers the transistor longer.

QUIZ Lesson 10
The PNP Transistor

1. In any schematic, Q represents what component?
   a. resistor
   b. transistor
   c. capacitor
   d. push button
2. The arrow in the transistor symbol represents what action?
   a. direction of current flow
   b. direction of the collector
   c. direction of the base
3. What would happen if the 470 ohm resistor was not placed in line with the LED?
   a. The LED would burn out.
   b. The LED would glow brightly
   c. The LED would not work
   d. The LED would flash.
4. If you replace the 10 µF cap with a 100 µF cap, predict what would happen.
   a. The LED stays off a shorter time.
   b. The LED stays on the same amount of time.
   c. The LED stays on about twice as long.
   d. The LED stays on about 10 times as long.
5. How does the PNP transistor differ from the NPN transistor?
   a. The NPN turns on faster than the PNP.
   b. The NPN starts in the "on" position while the PNP starts in the "off" position.
   c. Voltage to the base turns the NPN "on" while the same turns the PNP "off."
   d. Voltage is fed to the emitter of the NPN, but voltage is connected to the collector of the PNP.
6. Why is R1 in this circuit?
   a. It keeps the LED from burning out.
   b. It drains voltage from the capacitor.
   c. It slows down the action of the transistor.
   d. It allows the current to flow to V+.
7. What would happen if R3 was not in the circuit and the LED was connected directly to the collector of the 3906 transistor?
   a. LED would burn out
   b. LED would be bright
   c. LED would not work
   d. LED would flash
8. Think of the capacitor as a sink, holding water. Think of the resistor as the drain pipe. Which best explains how changing to a higher resistance has the same effect as changing to a larger capacitor?
   a. The drain is bigger and empties the water faster.
   b. The drain is smaller and empties the water slower.
   c. The volume of water is bigger and takes longer to drain.
   d. The volume of water is smaller and drains faster.
9. The 3904 transistor is a PNP type.
   a. True
   b. False
10. In this course, you have two types of transistors to deal with. What is the easiest way to tell them apart?
   a. Check them out on the DMM.
   b. Read the number.
   c. They say NPN or PNP on the label.
   d. Ask the teacher.

QUIZ Lesson 13

Specialized Transistors: The SCR

1. Would the buzzer work without the LED?
   a. Yes
   b. No
2. How do you turn on the SCR latching circuit?
   a. voltage placed to leg A
   b. voltage placed to leg B
   c. voltage placed to leg G
   d. voltage placed to leg K
3. How do you turn off the SCR latching circuit?
   a. Remove the power supply.
   b. Wait for a minute; it will turn itself off automatically.
   c. Disconnect the buzzer.
   d. Voltage to leg B.
4. What is the best definition of an SCR?
   a. latching circuit
   b. trapdoor circuit
   c. buzzer circuit
   d. alarm circuit
5. Follow the triggering current path when the normally closed push button is in its normal position (Figure A2-6).
   a. D1 to R2 and can't go any further until the push button is pushed
   b. D1 to R1 to PB to ground
   c. D1 to R1 to D2 to gate of SCR to ground
   d. D1 to buzzer and LED, through the SCR to ground
6. Follow the triggering current path when the normally closed push button is pushed (Figure A2-7).
   a. D1 to R2 to gate of the SCR
   b. D1 to R1 to PB to ground
   c. D1 to R1 to D2 to gate of SCR
   d. D1 to buzzer and LED, through the SCR to ground

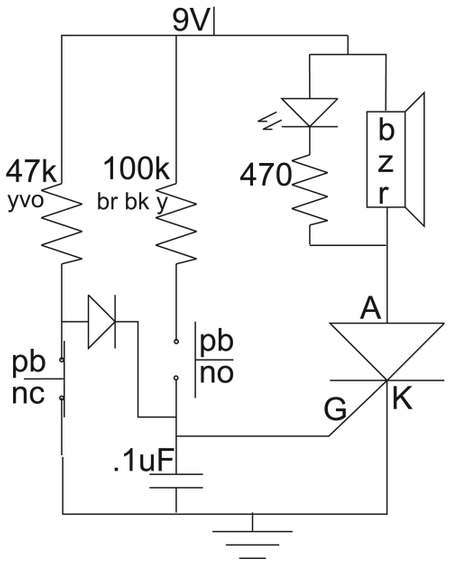

Figure A2-6

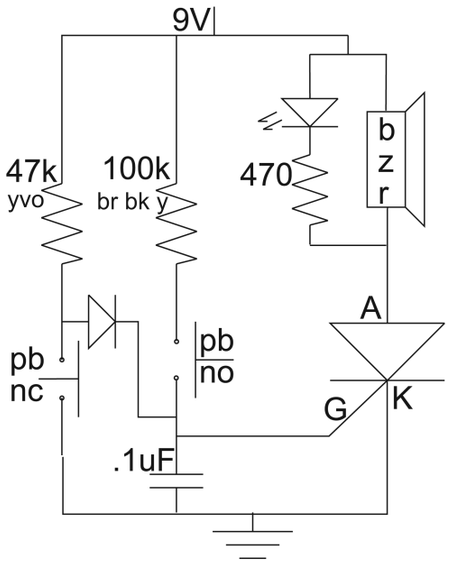

Figure A2-7

7. Refer to Figure A2-7. Follow the triggering current path when the normally open push button is in its normal position.
   a. D1 to R2 and can't go any further until the push button is pushed
   b. D1 to R1 to PB to ground
   c. D1 to R2 across PB2 to gate of SCR to ground
   d. D1 to buzzer and LED, through the SCR to ground
8. Refer to Figure A2-7. Follow the triggering current path when the normally open push button is pushed.
   a. D1 to R2 and can't go any further until the push button is pushed
   b. D1 to R1 to PB to ground
   c. D1 to R2 across PB2 to gate of SCR to ground
   d. D1 to buzzer and LED, through the SCR to ground

QUIZ Lesson 15
A Spoiled Billionaire

1. The proper sequence for translating an 8-bit binary number to decimal is
   a. left to right as we read
   b. 64 – 32 – 16 – 8 – 4 – 2 – 1 – 0
   c. 128 – 64 – 32 – 16 – 8 – 4 – 2 – 1
   d. 1 – 2 – 4 – 8 – 16 – 32 – 64 – 128
2. 00101100 binary equals
   a. 0 + 0 + 32 + 0 + 8 + 4 + 0 + 0 = 44 decimal
   b. 0 + 0 + 4 + 0 + 16 + 32 + 0 + 0 = 52 decimal
   c. 0 + 0 + 2 + 4 + 0 + 16 + 0 + 0 = 24 decimal
   d. 0 + 0 + 6 + 0 + 4 + 3 + 0 + 0 = 13 decimal
3. The binary number 000 can count
   a. 1 to 8
   b. 1 to 4
   c. 0 to 7
   d. 0 to 4
4. Watts is a unit of
   a. power
   b. force
   c. energy
   d. brightness
5. Counting binary in the proper order is
   a. 11 – 10 – 01 – 00
   b. 00 – 01 – 10 – 11
   c. 0 – 1 – 2 – 3
   d. 3 – 2 – 1 – 0
6. What is the best definition of binary?
   a. a two-number counting system
   b. a system of using opposite signals that allow machines to count
   c. Alpha Centuri and Beta Centuri
   d. a simple way to count up to 255

QUIZ Lesson 16
The Basic Digital Logic Gates

1. What is the best definition of digital?
   a. You have ten fingers—all digits.
   b. It is a method of counting using opposite signals, used by machinery.
   c. It is an easy system of counting using two digits.

2. What is the best definition of analog?
   a. A simple system that uses varying voltages. It is not precise.
   b. It is easily processed, but not easily interpreted by machines.
   c. It is a great monthly science fiction magazine.
   d. It uses varying voltages for inputs.
3. If a digital system is powered by 9 volts, how much voltage must be at an input to be seen as a Hi?
   a. 9 volts
   b. greater than 4.5 volts
   c. less than 4.5 volts
   d. 0 volts
4. Voltage at the input is automatically compared to the system voltage to see if it is to be sensed as a high or low.
   a. True
   b. False
5. Inputs to digital system must be either V+ or 0 volts.
   a. True
   b. False
6. Outputs from a digital system are either V+ or ground.
   a. True
   b. False
7. Each of the different gates gives different results.
   a. True
   b. False
8. And gate
   a. H & H yields Hi
   b. L & L yields Hi
   c. H & H yields Lo
9. If a logic gate system is powered at 10 volts, the inputs will respond to any voltage from 0 to 10 volts.
   a. True
   b. False
10. If a system is powered at 10 volts, the logic gate output produces a digital signal. The output produces
    a. a voltage greater or less than half of the system voltage
    b. 0 volts (low)
    c. 0 volts or 10 volts (high or low)
    d. any voltage from 0 to 10 volts
11. Logic gates inside the ICs are made of small electromagnets.
    a. True
    b. False
12. Logic gates inside the ICs are made of transistors.
    a. True
    b. False

QUIZ Lesson 17
Integrated Circuits: CMOS ICs

1. A static electric charge is made when extra free electrons collect onto a surface of an insulator that doesn't let them flow.
   a. True
   b. False

2. CMOS safety. What is the easiest way to remove static electricity from your fingers?
   a. Don't bother trying because you can't.
   b. Touch the painted or plastic case of your computer.
   c. Touch a large metal object with all of your fingers.
   d. Wear a wristband designed to remove static charge.
3. It is okay to put a CMOS chip into the breadboard in either direction.
   a. True
   b. False
4. The CMOS IC chips are very sturdy and can stand lots of handling.
   a. True
   b. False
5. What is the best definition of DIP?
   a. dual inline processor
   b. double information placing
   c. dual inline package
   d. a negative bump in the road
6. The CMOS series of ICs can be powered with as little as
   a. 2 volts
   b. 3 volts
   c. any analog voltage
   d. V+
7. The 4011 means what here? "4011 quad dual input NAND gate"
   a. It is from the 4000 series CMOS ICs.
   b. It has four outputs.
   c. It has four inputs.
   d. It can take 4,000 volts.
8. The word quad means what here? "4011 quad dual input NAND gate"
   a. There are four inputs.
   b. There are four outputs.
   c. There are four gates.
   d. It operates on 4 volts.
9. The phrase "dual input" means what here? "4011 quad dual input NAND gate"
   a. Two inputs per chip
   b. Two gates per chip
   c. Two outputs per gate
   d. Two inputs per gate
10. When comparing analog to digital, the biggest advantage of digital electronics is
   a. speed and accuracy
   b. size and special equipment
   c. cost and versatility
   d. its simplicity and ability to use varying voltages

QUIZ Lesson 18

Building the First NAND Gate Circuit

1. Why tie the inputs of the two unused NAND gates to ground (pins 5, 6 and 8, 9)?
   a. If inputs are not tied to V+ or ground, they react to electromagnetic energy around us.
   b. If unused inputs are not connected Hi or Lo, it's affected by ectoplasm in the air.
   c. An untied input means the voltage will always be high.
   d. An untied input means that the input would always be low.

2. An unused output should be tied to ground.
   a. True
   b. False
3. What is the best definition of a schematic?
   a. a system diagram with pictures
   b. a picture of the components on the solderless breadboard
   c. a trace of the wiring on a printed circuit board
   d. a representation of the circuit using electronic symbols
4. In a schematic
   a. voltage is at the top with inputs on the right, outputs at the left
   b. voltage is at the top with inputs on the left, outputs at the right
   c. voltage flows upwards and the IC is the processor
   d. voltage flows downwards and the IC is the processor
5. On the solderless breadboard
   a. voltage is at the top with inputs on the right, outputs at the left
   b. voltage is at the top with inputs on the left, outputs at the right
   c. voltage flows upwards and the IC is the processor
   d. voltage flows downwards and the IC is the processor
6. The system voltage for the 4011 IC is being provided at what pin?
   a. 1
   b. 7
   c. 8
   d. 14
7. All CMOS ICs of the 4000 series are fed voltage through the pin opposite pin 1. The ground is connected to the pin diagonal to the voltage supply. Both have to be connected for the IC to function.
   a. True
   b. False

QUIZ Lesson 19

Testing the Input at Test Point 1

1. All inputs must be connected to either Hi or Lo.
   a. True
   b. False
2. When the push button is not closed, pins 12 and 13 are connected to
   a. V+ through R1
   b. ground through pin 7
   c. V+ through pin 14
3. Input voltage at pins 12 and 13 is being compared to the system V+ provided to the 4011 IC at pin
   a. 14
   b. 11
   c. 8
   d. 7
4. What is the voltage at TP1 when the PBNO is held closed?
   a. V+, connected to voltage
   b. 0, connected to ground
   c. V+ is unstable
   d. V+ is an analog signal

QUIZ Lesson 20

Test Point 2: The NAND Gate Processor at Work

1. How is it that Test Point 2 can be Hi? Think about it. How can two inputs of zero volts create an output of 9 volts?
   a. The inputs are like switches. Their state reroutes the voltage from pin 14.
   b. It's like multiplication. Negative times negative gives a positive.
   c. Any number over itself is equal to 1. So 0/0 gives a 1, representing Hi.
2. A circuit is at rest when the power is turned off.
   a. True
   b. False
3. A circuit is active when the power is connected.
   a. True
   b. False
4. When the output at pin 11 is Hi, this output will act as a connection to
   a. 0 volts
   b. low
   c. pin 7
   d. V+
5. When the output at pin 11 is Lo, this output will act as a connection to
   a. V+
   b. ground
   c. the inputs
   d. pin 14

QUIZ Lesson 21

Test Point 3: Introducing the Resistor/Capacitor Circuit

1. It is the best definition of rest.
   a. The battery is not connected and the circuit is not turned on.
   b. There has been an input and the processor is not doing anything, and the output changes.
   c. There has been an input and the processor is controlling the changing output.
   d. The system is stable, the processor is not doing anything, and the output is unchanged.
2. What is the best definition of active?
   a. The battery is connected and the circuit is turned on.
   b. There has been an input and the processor is not doing anything, and the output changes.
   c. There has been an input and the processor is controlling the changing output.
   d. The system is stable, the processor is not doing anything, and the output is unchanged.
3. When is this circuit off?
   a. The circuit is off when the output is Lo.
   b. The circuit is off when the power is disconnected.
   c. The circuit is off when it is at "rest."
   d. The circuit is off when the inputs are Lo.

4. All inputs have to be connected to either voltage or ground. Pins 2 and 3 are the inputs to the second NAND gate in this circuit. How are they are connected to ground?
   a. through D1
   b. through C1
   c. through R2
   d. through pin 7
5. What does the abbreviation RC stand for?
   a. resistor capacitor
   b. real capacitance
   c. resistor centered
   d. remote control
6. Approximately what was the voltage at TP3 when the LED turned?
   a. V+—the voltage of your battery or power supply
   b. half of V+—half of the voltage of your battery or power supply
   c. ground—when the voltage had drained completely from the RC
7. What was the result when only the capacitor was increased in size by 10 times (compare all timing in seconds)?
   a. The LED stayed on the same amount of time.
   b. The LED stayed on almost exactly 5 times longer.
   c. The LED stayed on almost exactly 10 times longer.
   d. The LED stayed on almost exactly 20 times longer.
8. What was the result when the resistor was increased in size by 10 times? The LED stayed on
   a. the same amount of time
   b. almost exactly 5 times longer
   c. almost exactly 10 times longer
   d. almost exactly 20 times longer
9. How long would the LED stay on if the resistor was 10 M (and the cap was 100 μF)?
   a. 50 seconds
   b. 100 seconds
   c. 500 seconds
   d. 1,000 seconds
10. How long would the LED stay on if the resistor was 5.0 M (and the cap was 100 μF)?
   a. 25 seconds
   b. 50 seconds
   c. 250 seconds
   d. 500 seconds

QUIZ Lesson 22

Test Point 4: The Inputs Are Switches

1. Why was the LED removed before the measurements were taken at Test Point 4A (pin 3)?
   a. The LED was in the way.
   b. The LED used 2 volts and changed the readings.
   c. The output at pin 3 was Hi.
2. The measure at TP 4A (pin 3 with LED removed) when the circuit is active is
   a. V+
   b. 2 volts less than V+
   c. half of V+
   d. ground

3. The measure at TP 4A (pin 3 with LED removed) when the circuit is at rest is
   a. V+
   b. 2 volts less than V+
   c. half of V+
   d. 0 volts
4. The measure at TP 4B (pin 3 with LED in place) when the circuit is active is
   a. V+
   b. 2 volts less than V+
   c. half of V+
   d. 0 volts
5. The measure at TP 4B (pin 3 with LED in place) when the circuit is at rest is
   a. V+
   b. 2 volts less than V+
   c. half of V+
   d. 0 volts
6. Why did the active voltage reading at pin 3 change after the LED was placed back in?
   a. The LED, as a load, used some of the total voltage available.
   b. The LED, as a resistor, used some of the voltage available.
   c. The LED, as an inductor, added some voltage to the total available.
7. The best description of why the LED turns on when the circuit becomes active is that
   a. When output pin 3 goes Hi, it acts as voltage and supplies voltage to the LED.
   b. When output pin 11 goes Hi, it acts as voltage and supplies voltage to the LED.
   c. When input pins 2 and 1 go Lo, they act as ground. The voltage passes through the LED to ground.
   d. When pin 3 goes Lo, it acts as ground and the voltage passes through the LED to ground.
8. The best description of why the LED turns off when the circuit is at rest is
   a. When output pin 3 is Hi, it acts as voltage. V+ pushing against V+ does not allow current to move.
   b. When output pin 11 is Hi, it acts as voltage. V+ pushing against V+ does not allow current to move.
   c. When input pins 2 and 1 go Lo, they act as ground. No voltage and LED is off.
   d. When pin 3 goes Lo, it acts as ground and doesn't supply any current to the LED.
9. On the worksheet, you changed the LED's connection from V+ to ground. Which statement best describes the circuit's behavior in that setup?
   a. The LED is on when the system is at rest.
   b. The LED is active when off and at rest when on.
10. What is happening when the worksheet circuit is active?
   a. When output at pin 3 is Lo, it acts as ground and the voltage from V+ pushes the current through the LED to ground.
   b. When output at pin 11 is Hi, it acts as voltage and supplies voltage to the LED (current passes to ground).
   c. When input pins 1 and 2 are Lo, they act as ground. The voltage passes through the LED to pins 1 and 2.
   d. When pin 3 goes Lo, it acts as ground and the voltage passes through the LED to pin 3.

QUIZ Lesson 23

Understanding Voltage Dividers

1. How much voltage is used across the total load?
   a. Only enough to power the load itself.
   b. All of the voltage is used.
   c. Only a fraction of the current is needed.
   d. Perhaps only a small amount of current.
2. A load is always a resistor.
   a. True
   b. False
3. A resistor is always a load.
   a. True
   b. False
4. The adjustable resistor used here is called a(n)
   a. potentiometer
   b. trim pot
   c. LDR
   d. LED
5. The circuit is off when
   a. there is no output
   b. the power is disconnected
   c. when it is at "rest"
   d. when the inputs are Lo
6. The voltage dividers here
   a. provide an analog voltage to the inputs
   b. provide a digital voltage to the inputs
   c. provide an analog voltage to the output
   d. provide a digital voltage to the output
7. The NAND gate inputs pins 12 and 13 respond to the changing voltage of the voltage divider.
   a. True
   b. False
8. Why is the capacitor removed from this circuit?
   a. to allow you to get instant results from your circuit
   b. to slow down the delay of the RC timer
   c. to get it out of the way
   d. to stop the resistor from draining the voltage
9. If there are two equal loads
   a. Each load uses the same amount of voltage.
   b. The first load uses the most voltage.
   c. The second load uses more voltage.
   d. You don't have enough information to say what is happening.
10. If there are three resistors, the total load is equal to
    a. R1 + R2 + R3
    b. Each load will use the same amount of voltage.
    c. All of the voltage is used from V+ to ground.
11. If R1 = 50K and R2 = 100K, the total load is
    a. 150 ohms
    b. R1 + R2
    c. 50K ohms
    d. 100K ohms
12. If R1 = 50K ohms and R2 = 100K ohms, what fraction of voltage is used across R1?
    a. One-third of the voltage is used.
    b. Two-thirds of the voltage is used.
    c. All of the voltage is used.
    d. Half of the voltage is used.

13. If R1 = 100 ohms and R2 = 47 ohms, what fraction of voltage is used across R1?
    a. One-third of the voltage is used.
    b. Two-thirds of the voltage is used.
    c. All of the voltage is used.
    d. Half of the voltage is used.
14. The changing voltage allows you to
    a. control the output
    b. control the type of gate
    c. change the resistor value
    d. control the voltage at the input to the logic gates
15. If voltage to the inputs from the voltage divider is greater than half of V+ supplied to the IC
    a. The inputs translate this as Lo and the NAND gate output becomes Hi.
    b. The inputs translate this as Hi and the NAND gate output becomes Lo.
    c. The capacitor fills with voltage.
16. When a variable resistor is used in a voltage divider, the ratio of R1 (R1+R2) changes, affecting the voltage at the test point between the resistors.
    a. True
    b. False

QUIZ Lesson 25
The Touch Switch

1. The voltage value at the midpoint between R1 and R2 changes as the ratio between R1 and R2 changes.
    a. True
    b. False
2. A voltage divider is made by
    a. R1 and R2
    b. A single resistor
    c. Any load that uses voltage
    d. Taking voltage from between two loads in series
3. What is the best definition of the term "series"?
    a. any set of components set next to each other, each connected to the same voltage
    b. when components are set in line one after another, as in a string of items
4. Using a voltage divider, you can adjust the voltage to whatever value you desire.
    a. True
    b. False
5. Any device that changes its resistance by an outside event can be used as a sensor for a digital circuit.
    a. True
    b. False
6. The touch switch works when our finger acts as the second resistor.
    a. True
    b. False
7. When the touch switch is open (no finger), there is no voltage divider because
    a. The finger acts as a resistor.
    b. The 20M resistor is enough.
    c. There is only a single load (one resistor).
8. In the touch switch, no voltage divider exists until what event happens?
    a. You remove your finger.
    b. You place your finger into the circuit.
    c. The circuit becomes active.
    d. The 20M resistor changes voltage.

9. Holding a probe of the DMM in each hand, your skin has a resistance between
   a. 100 Ω to 1000 Ω
   b. 1000 Ω to 50 kΩ
   c. 50 kΩ to 5 MΩ
   d. 5 MΩ To 50 MΩ
10. If R1 in the touch switch is made 1M ohm, this would still be an effective touch switch.
   a. True
   b. False

QUIZ Lesson 27

Understanding the NAND Gate Oscillator

All questions relate to Figure A2-8.

1. When an input is "slaved" to an output
   a. The output directly controls the input.
   b. The input controls the output.
   c. The dual inputs depend on each other.
   d. The output depends on the slaved input.
2. What is the best definition of oscillate?
   a. frequency
   b. amount of time needed to turn off
   c. to swing back and forth regularly
   d. beats per second
3. What is the best definition of an RC circuit?
   a. an oscillating circuit
   b. an amplifier for the output device
   c. the subsystem that controls the master/slave relationship
   d. a timing circuit made of a resistor and a capacitor
4. The best analogy of an RC circuit is to compare the capacitor to a sink and the resistor to the drain.
   a. True
   b. False
5. RC1 is made of C1 and R2. It controls
   a. the type of switch needed to activate the circuit
   b. the frequency of the circuit
   c. the amount of time the circuit stays active after it is triggered

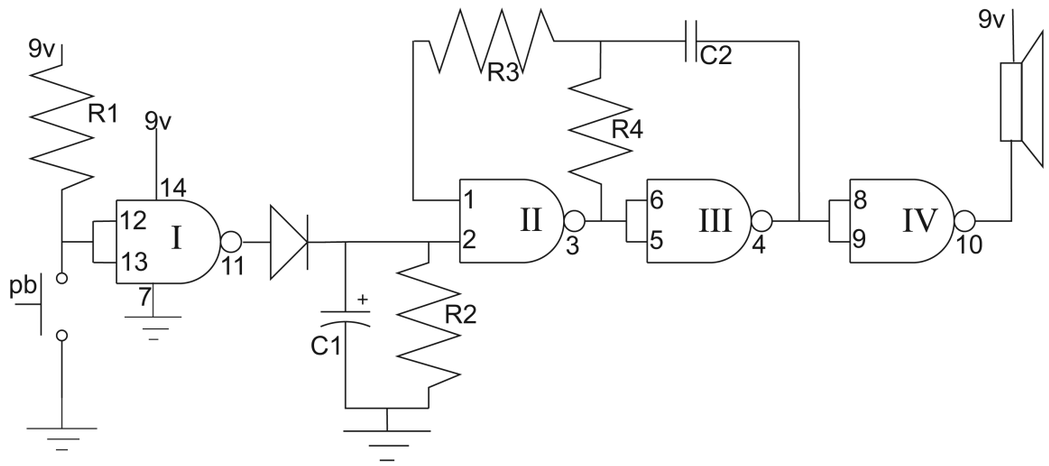

Figure A2-8

6. RC2 is made of
   a. R3 and C2
   b. R4 and C2
   c. R2 and C1
   d. R2 and C2
7. RC2 controls the
   a. speed of the output (frequency)
   b. size of the output (amplitude)
   c. brightness of the LED
   d. the time the circuit stays active
8. Pin 3 is the same as gate 3.
   a. True
   b. False
9. Input to pin 1 is slaved to the input at pin 2.
   a. True
   b. False
10. The inputs at pins 5 and 6 are slaved to the output of pin 3.
    a. True
    b. False
11. Pin 10 is Lo when the system is at rest.
    a. True
    b. False
12. The best analogy as to why the LED does not light when the state of pin 10 is high:
    a. one person pushes a door open, letting voltage through with no opposition
    b. two people pushing on opposite sides of a door with equal force
    c. the LED is a diode and doesn't allow voltage through one direction
    d. two people pushing the door the same way allowing voltage through with no opposition
13. How can you tell if an LED is burnt out?
    a. It looks different, with a black spot inside.
    b. You put it into a 9-volt circuit with a 470-ohm resistor. If the LED is in properly and does not light up, you can assume it is burnt out.
    c. Check it with a multimeter using the continuity tester.
    d. Check the voltage on the LED with the multimeter.

QUIZ Lesson 28

Controlling the Flash Rate

1. Regarding RC2, more resistance would slow the fill and drain of the capacitor, slowing the oscillation rate.

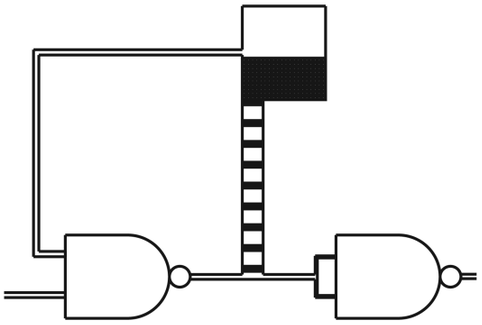

Figure A2-9

   a. True
   b. False
2. The larger capacitor would fill and drain more easily, making the oscillation faster.
   a. True
   b. False

3. How would you make the oscillation rate 10 times slower?
   a. have a resistor with 10 times more resistance
   b. have a resistor with 10 times less resistance
   c. have a capacitor with 10 times less capacitance
   d. have a capacitor with 10 times more resistance
4. If C2 had a value of 5 μF and was replaced with a value of 1 μF, the flash rate would be
   a. the same speed
   b. five times faster
   c. five times slower
   d. not enough information given here
5. Which of the following is NOT a good definition of hertz?
   a. regular oscillations
   b. frequency
   c. how fast something happens
   d. beats per second
6. Why does the voltage in the RC2 animation never reach ground or V+?
   a. As soon as the voltage change reaches pin 1 (slave), the output changes.
   b. It is an analog gate.
   c. Inputs respond instantly as voltage passes the half-V+ mark.
   d. There isn't enough time to charge or drain completely.
7. What is the "at rest" state of pin 3?
   a. high
   b. low
8. What is the "at rest" state of pin 10?
   a. V+
   b. ground

QUIZ Lesson 31

Scoping Out the Circuit

When RC2 has the following values: R4 = 100 kΩ and C2 = .01 μF

1. What is the best way to describe the signal at pin 3?
   a. square wave
   b. RC draining
   c. sine wave
   d. flat line above ground
2. What is the best way to describe the signal at Test Point 3A (R4 meets R3 and C2)?
   a. square wave
   b. sawtooth wave
   c. sine wave
   d. flat line above ground
3. The signal at TP 3A is an analog signal.
   a. True
   b. False
4. What is the best way to describe the signal at Test Point 3B (pin 4)?
   a. square wave
   b. sawtooth wave
   c. sine wave
   d. flat line above ground
5. What is the best way to describe the signal at Test Point 4A (pin 10, with the speaker out)?
   a. square wave
   b. sawtooth wave
   c. sine wave
   d. flat line above ground

6. How is the sloppy RC voltage changed into a clean digital signal at pin 10?
   a. The transistor cleans it up.
   b. That is automatically done at the output pins 8 and 9.
   c. Pins 5 and 6 are slaved to pin 3.
   d. The changing voltage at the inputs is modified by the gate into Hi's or Lo's.
7. What is the best way to describe the signal at Test Point 4B (pin 10, with the speaker in)?
   a. square wave
   b. ground
   c. sine wave
   d. flat line above ground
8. The movement of a signal through a load changes the shape of the signal.
   a. True
   b. False

QUIZ Lesson 32

Using a Transistor to Amplify the Output

1. Why is a PNP transistor used here?
   a. The Hi output from pin 10 (at rest) turns the PNP transistor off, saving power.
   b. The Lo output from pin 10 (at rest) turns the PNP transistor off, saving power.
   c. The PNP is a better amplifier.
   d. The PNP is less expensive.
2. What would happen if an NPN transistor was used as an amplifier in this circuit?
   a. There would be no difference in sound.
   b. The Hi output from pin 10 (at rest) would keep the NPN turned on and drain the battery.
   c. The Lo output from pin 10 (at rest) would keep the NPN turned on and drain the battery.
   d. It would not work as well, because it isn't as good an amplifier.
3. What is the best definition of a transistor?
   a. a miniature electromagnet
   b. a basic mechanical switch
   c. a basic component of electronics
   d. the basic electronic switch
4. What is the best definition of a PNP transistor?
   a. It allows current to flow from C to E when no voltage is at the base.
   b. It allows current to flow from E to C when no voltage is at the base.
   c. It allows current to flow from C to E when there is voltage at the base.
   d. It allows current to flow from E to C when there is voltage at the base.
5. Transistors are analog devices.
   a. True
   b. False
6. Why does the transistor amplify the volume?
   a. It creates less resistance in the speaker.
   b. It allows more voltage and current through the speaker.
   c. It allows more voltage through to the speaker.

7. Why change from the LED to the speaker?
   a. The frequency is too fast to count visually, but you are able to hear the frequency change.
   b. As the frequency changes, the volume changes.
   c. The LED can't flash that fast.
8. A component is polar when
   a. the component reverses the flow of electrons
   b. the current goes from positive to negative
   c. the part works only when the current flows through in a specific direction
   d. the part works when it is cold
9. A speaker is the same as a buzzer.
   a. True
   b. False
10. The speaker clicks when
    a. the voltage changes from Lo to Hi
    b. the voltage changes from Hi to Lo
    c. both A and B
    d. anytime the voltage changes in this analog circuit
11. How do you check to see if you have broken the speaker coil?
    a. Look for a rip in the cardboard.
    b. Touch the speaker to your battery and listen.
    c. Use the multimeter to test the continuity across the speaker terminals.

QUIZ Lesson 38

RC1: Creating the System's Switch

1. What if a 7.2 volt zener diode was used in this circuit? How much voltage would be available at tpB?

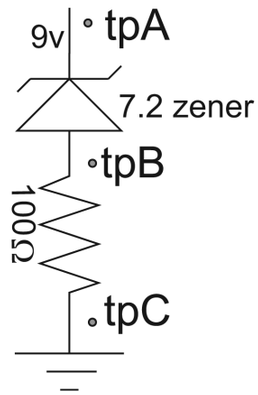

Figure A2-10

   a. 7.5 volts
   b. 2.5 volts
   c. 1.5 volts
   d. No voltage
2. What if the battery had only 7 volts left? How much voltage is at tpB?
   a. 7.5 volts
   b. 2.5 volts
   c. 1.5 volts
   d. no voltage
3. If 8 volts are available, how much voltage would pass a 3.5-volt zener diode? _____
4. The breakdown voltage of the zener diode we are using is
   a. 4.9 volts
   b. 3.5 volts
   c. 5.1 volts
   d. 1.5 volts

5. What is the best definition of "breakdown voltage"?
   a. the current needed to pass the diode's one-way effect
   b. part of the voltage is used as it passes
   c. the amount of voltage stopped by the zener diode
   d. the amount of voltage needed to pass from voltage to ground
6. Identify which side of the zener diode should be connected towards ground.

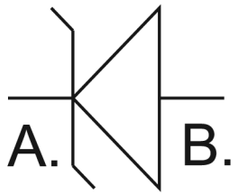

Figure A2-11

   a. A
   b. B
7. If V+ is 12 volts as shown and a 5.1 volt zener diode is used, what is the voltage at the test point?

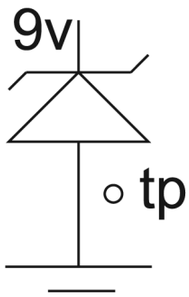

Figure A2-12

   a. 0.0 volts
   b. 5.1 volts
   c. 12.0 volts
   d. 6.9 volts
8. A zener diode acts like a one-way street until
   a. a voltage is applied to it
   b. a current bigger than its capacity is applied
   c. a voltage bigger than its rated breakdown voltage is applied
   d. a resistance is applied to the front
9. The zener diode is rated by
   a. its ability to resist current
   b. the heat it gives off
   c. its ability to hold electrons
   d. its breakdown voltage

QUIZ Lesson 39

The 4046 Voltage-Controlled Oscillator

1. What is the best definition of a clock signal?
   a. a fast rise from ground to V+
   b. an instant rise from ground to V+
   c. a fast fall from V+ to ground
   d. an instant fall from V+ to ground
2. What is the best definition of a square wave?
   a. a steady frequency made of clock signals
   b. a steady frequency made of sine waves
   c. a clock signal and square wave are the same
   d. the type of wave a nerd surfer rides
3. What is the best definition of analog?
   a. The clock signal input is analog.
   b. The input can be any voltage between V+ and 0 volts.
   c. The input is conditioned to ground.
   d. Analog is either Hi or Lo.

4. What makes the output from the 4046 digital?
   a. The clock signal output is digital.
   b. The output can be any voltage between V+ and 0 volts.
   c. The output is conditioned to ground.
   d. Digital is either Hi or Lo.
5. Why is the 4046 considered an analog-to-digital converter?
   a. Input to a digital gate is seen as a Hi when it is greater than half of V+.
   b. The input voltage (analog) determines the output frequency (digital).
   c. Analog is any voltage from ground to V+.
   d. The digital input determines the analog frequency output.
6. R1 and C1 set with the zener diode still make an RC circuit.

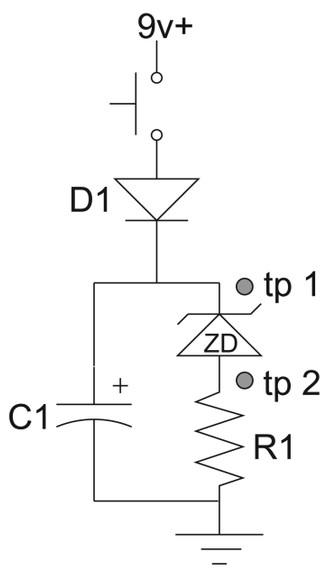

Figure A2-13

   a. True
   b. False

7. What does VCO stand for?
   a. voltage carry out
   b. voltage counting output
   c. voltage counting oscillations
   d. voltage-controlled oscillator
8. Why condition all inputs?
   a. Inputs must be conditioned Lo for circuits to work.
   b. The inputs are not conditioned. Only the outputs need to be conditioned.
   c. The input frequency must be regular so outputs will be clean.
   d. An unconditioned input will cause the output to act unpredictably.
9. What is meant by the term "logic state"?
   a. Hi or Lo
   b. analog voltage
   c. input voltage
   d. output voltage
10. RC2 controls
   a. time that the LED stays on
   b. length of the roll-down
   c. the minimum frequency
   d. the maximum frequency
11. RC1 controls
   a. time that the LED stays on
   b. length of the roll-down
   c. the maximum frequency
   d. the minimum frequency
12. The DMM (set to VDC) connected to pin 4 output measures half of V+ because
   a. It measures an average of the square wave output.
   b. The frequency is too slow.
   c. The LED uses 2 volts.
   d. Pins 3 and 4 are connected together.

13. Rmn at pin 12 is left empty. This effectively has a resistance of
    a. infinite Ω
    b. 0 Ω (no resistance)
    c. 100,000 Ω
    d. 20,000,000 Ω
14. The best explanation of a clock signal is
    a. a rise of voltage from ground to V+
    b. an instantaneous rise of voltage from ground to V+
    c. a drop of voltage from V+ to ground
    d. an instantaneous drop of voltage from V+ to ground
15. The maximum frequency of the clock signal given at pin 4 of the 4046 is determined by
    a. comparing the voltage at pin 16 to the voltage at pin 9
    b. the RC combination of the resistor at pin 11 and the cap connecting pins 6 and 7
    c. the RC combination of the resistor at the zener diode and the capacitor connected to ground
    d. the speed that the push button is pressed
16. What input to the 4046 controls the frequency of the output at pin 4?
    a. comparing the voltage at pin 16 to the voltage at pin 9
    b. the RC combination of the resistor at pin 12 and the cap connecting pins 6 and 7
    c. the RC combination of R1 and C1
17. The frequency is determined by
    a. the analog voltage input
    b. comparing two voltages
    c. the RC circuit
    d. the analog voltage output

QUIZ Lesson 40

Introducing the 4017 Walking Ring Decade Counter

1. Which shows two wires crossing without connecting?

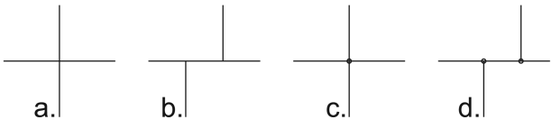

Figure A2-14

2. Conditioning means
    a. setting an output to either Hi or Lo
    b. setting an input to either Hi or Lo
    c. setting pin 14 to V+ and pin 7 to ground
    d. getting all of the wiring correct
3. Why must conditioning be done?
    a. so the unused outputs don't react to static in the air
    b. anything unconditioned automatically acts like a Lo (ground)
    c. so the chip won't burn out
    d. so the inputs don't react to the static in the air
4. What is the function of the carryout at pin 12?
    a. It is another input that uses one-tenth of the signal in.
    b. It goes Hi once every five clock signals.
    c. It is the major processor of the 4017 IC.
    d. It produces a Hi from 0 to 4 and Lo from 5 to 9.
5. When pin 6 is Hi, what is the state of pin 3?
    a. enable
    b. reset
    c. Hi
    d. Lo

6. What pin of the 4017 is reset?
   a. 13
   b. 14
   c. 15
   d. 16
7. What pin is the clock signal input?
   a. 1
   b. 7
   c. 8
   d. 14
8. Define clock signal.
   a. For every 10 inputs, there is 1 output.
   b. It is a time given to the input.
   c. It is a square wave.
   d. It is an instantaneous change from Lo to Hi.
9. What happens if an input is not tied Hi or Lo?
   a. The related output doesn't react properly.
   b. The input acts as if it were Hi.
   c. The input acts as if it were Lo.
   d. The output automatically goes Hi.
10. A "ghost" is an unexplainable result usually caused by an unconditioned input.
    a. True
    b. False

QUIZ Lesson 41

Understanding the Clock Signal Used by the 4017

1. A ghost is an unexplainable output due to unconditioned inputs.
   a. True
   b. False
2. How many steps does the count advance for each clock signal?
   a. Zero
   b. One
   c. Five
   d. Ten
3. How many outputs (out0 to out9) are Hi at any given moment?
   a. Zero
   b. One
   c. Five
   d. Ten
4. An unconditioned input will act as if it is connected to ground [zero volts].
   a. True
   b. False
5. Any digital output must be conditioned either Hi or Lo.
   a. True
   b. False
6. All inputs to a digital IC must be conditioned Lo.
   a. True
   b. False
7. Pin 12 is high during which portion of the count?
   a. 01234 56789
   b. 01234 56789
   c. 12345 6789 10
   d. 12345 6789 10
8. What is the purpose of the reset (pin 15)?
   a. stops the count
   b. freezes the clock
   c. returns the count to zero
   d. steps forward to out(5) and sets the carryout to Lo

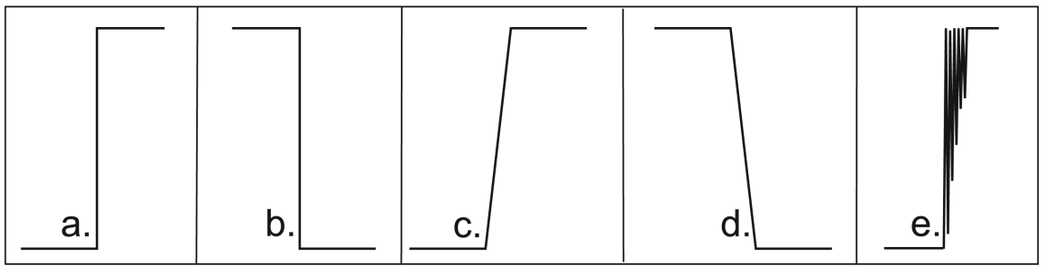

Figure A2-15

9. What is the purpose of the enable (pin 13)?
   a. returns to out(0) and sets pin 3 to Hi
   b. returns the count to pin 1 and sets out(0) to Hi
   c. returns the count to out(0) and then advances it by 1
   d. stops the count
10. What picture would best describe "bounce"? See Figure A2-15.

QUIZ Lesson 42

Controlling the Count—Using the Chip's Control Inputs

1. What happens when reset is temporarily set to Hi?
   a. returns to Out(0) and sets pin 3 to Hi
   b. returns the count to pin 1 and sets out(0) to Hi
   c. returns the count to out(0) and then advances it by 1
   d. stops the count
2. What is the function of the enable input when enable is set to Hi?
   a. freezes the count
   b. stops the clock
   c. returns to zero
   d. steps forward to out(5) and sets the carryout to Lo
3. What are the three inputs of the 4017?
   a. V+, clock, reset
   b. clock, reset, enable
   c. carryout, V+, enable
   d. enable, V+, reset
4. The condition of pin 15 for normal operation of the 4017 is Hi.
   a. True
   b. False
5. The condition of pin 13 for normal operation of the 4017 is Lo.
   a. True
   b. False
6. Why is the clock at pin 14 not conditioned to ground through a resistor?
   a. Pin 14 is V+, not an input.
   b. Pin 14 is the clock output and doesn't require conditioning.
   c. The 4046 output is either Hi or Lo, so that input is conditioned automatically.
   d. Pin 14 is connected directly to V+ and doesn't need a resistor.
7. Static in the air can affect an unconditioned input.
   a. True
   b. False

8. If the enable probe was connected to out(7), the sequence of the LEDs would be
   a. 0 1 2 3 4 5 6 STOP
   b. 1 2 3 4 5 6 7 STOP
   c. 0 1 2 3 4 5 6 7 STOP
   d. 1 2 3 4 5 6 7 1 2 3 4 5 6 7 1 2 3 . . . .
9. If the reset probe was attached to pin 10, the sequence of LEDs would be
   a. 0 1 2 3 4 5 6 7 8 9 0 1 2 3 4 5 6 7 8 9 . . .
   b. 1 2 3 4 5 6 STOP
   c. 0 1 2 3 4 0 1 2 3 4 . . .
   d. 0 1 2 3 0 1 2 3 . . . .
10. Because the lamp test is an input it needs a clock signal.
   a. True
   b. False

QUIZ Lesson 44

Control the Seven-Segment Display—Use the 4511

1. What is the simple definition of this chip?
   a. binary input decimal output
   b. decimal input binary output
   c. analog in, binary out
   d. binary in, analog out
2. Binary code is made of what type of signals?
   a. analog of varying voltages
   b. digital—highs and lows
3. What is the best definition of a binary word?
   a. It is made up of analog information.
   b. It is made up of digital information.
   c. It is a byte of information able to count 0 to 255.
   d. It is a binary number presented as a group input.
4. What number would be displayed if inputs B1 and B4 are set to Hi? _____
5. The lamp test is used for what purpose?
   a. It can be used to turn off the LEDs and save energy.
   b. It checks for any burnt-out LEDs.
   c. When set to ground, it turns off all the LEDs.
   d. It sets the count to zero and starts counting again.
6. When is blanking used?
   a. It can be used to turn off the LEDs and save energy.
   b. It checks for any burnt-out LEDs.
   c. When set to ground, it turns off all the LEDs.
   d. It stops the count and blanks the clock signal.
7. Using the 4511, what has to happen for the display to change from 8 to 9?
   a. another clock signal put to pin 1
   b. a Hi has to be applied to input B1
   c. connect all the right LEDs to V+
   d. a Hi has to be connected to pin 1
8. What is displayed when B4 and B8 are both Hi at the same time?
   a. The display shows “2.”
   b. The display shows “0.”
   c. The display turns off.
   d. All the LEDs turn on.
9. How many inputs total are there on the 4511 IC?
   a. 4
   b. 6
   c. 7
   d. 8

10. What would the seven-segment display show if the following schematic were set up?

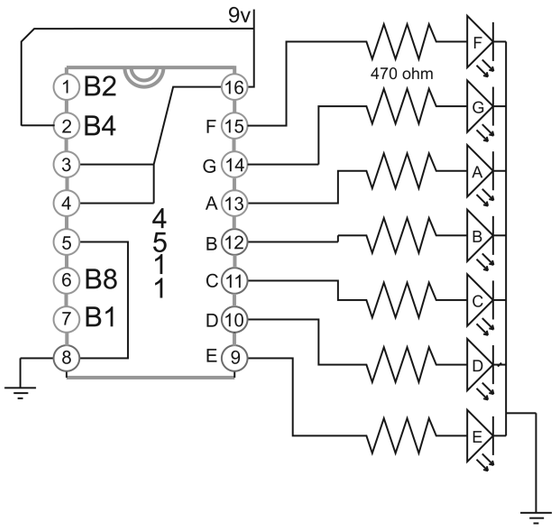

Figure A2-16

a. number 6

b. number 4

c. unpredictable

d. blank

11. What would the seven-segment display show if the following schematic were set up?

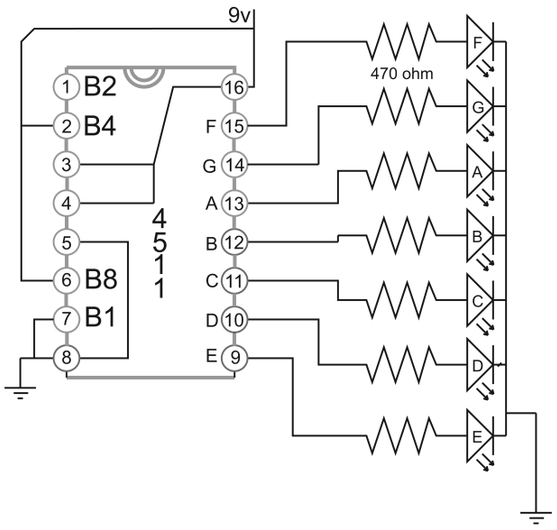

Figure A2-17

a. number 14

b. number 4

c. unpredictable

d. blank

12. What is the maximum decimal count of a 4-bit binary word?

a. 4

b. 1111

c. 15

d. 16

QUIZ Lesson 45

Decimal to Binary Conversion—The 4516

1. What is the simple definition of this chip?

a. binary counting decimal

b. decimal counting binary

c. clock counting binary

d. seven-segment driver

2. Why does the up/down control have to be set to either Hi or Lo?

a. It is an input and has to be conditioned.

b. It is an output and has to be conditioned.

c. It is controlled by a clock signal.

3. If there were three sets of 4516/4511 units, the maximum number displayed would be

a. 9

b. 99

c. 999

d. 9999

4. If the 4017 carryout is connected to the 4516 clock in, the 4516 would count
   a. 10 counts up for every 1 clock signal from the 4046
   b. 1 number advance for every 1 clock input to the 4017
   c. 1 number advance for every 1 clock input to the 4511
   d. 1 number advance for every 10 clock signals to the 4017
5. At power up, the binary word should be 0000. If everything is connected properly, this would display the number 0 on the seven-segment LED.
   a. True
   b. False
6. Assume that the load lines L1 and L4 are set to voltage. What needs to be done to set the display to show the number "5"?
   a. Set lamp test to voltage for a moment.
   b. Set reset Hi for a moment.
   c. Touch preload to voltage for a moment.
   d. Connect B1 and B4 to voltage.
7. What is the best definition of the term DCB?
   a. digital counting binary
   b. decimal counting binary
   c. decimal counting bytes
   d. digital counting bytes
8. All inputs are controlled with clock signals.
   a. True
   b. False
9. The binary word [0111] will show what number?
   a. 13
   b. 6
   c. 7
   d. 3
10. The binary word [1010] presented to the 5411 will show what number on the display?
    a. displays 10
    b. displays blanks
    c. displays _0
    d. all segments light up
11. Because the 4516 outputs are Hi or Lo, these automatically condition the 4511 inputs. You can remove the 100K Ω resistors from the 4511 inputs when they are connected to the 4516 outputs.
    a. True
    b. False
12. The 4516 can display [0101] but not any number above it.
    a. True
    b. False
13. What is the best definition of a binary word?
    a. It is a preset analog voltage.
    b. It is a binary number presented as a group input.
    c. It is a preset binary number presented as an input.
    d. It is a byte of information [00000000].

QUIZ Lesson 49

Transistors as Amplifiers and Defining Current

1. What is the voltage divider in the night light circuit?
   a. potentiometer and R1
   b. potentiometer and LDR
   c. LDR and R1
   d. R1 and LED

2. Describe the path the current travels to provide the power to the LED in this circuit.

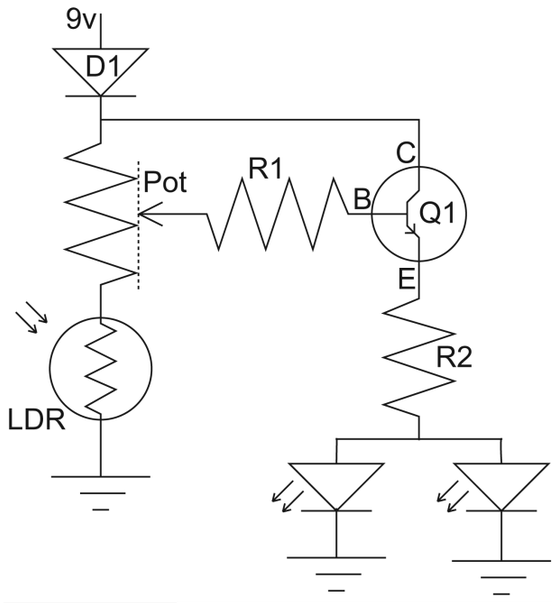

Figure A2-18

a. V+ – PB – C1 – R1 – Q1 – R2 – LED

b. V+ – D1 – PB – R1 – Q1 – R2 – LED

c. V+ – Q1 – R2 – LED

d. V+ – D1 – Q1 – R2 – LED

3. The transistor is classified as what type of component?

a. analog

b. digital

4. Two items of the same voltage can have different currents.

a. True

b. False

5. Ohm's law states the relationship between voltage, current, and capacitance.

a. True

b. False

6. "I" is the abbreviated unit for

a. current

b. amps

c. inductance

d. impedance

7. Using Ohm's law, you can figure what the current is if you know what other values?

a. power and resistance

b. amperage and voltage

c. voltage and watts

d. resistance and voltage

8. Current is measured in what unit?

a. amps

b. volts

c. ohms

d. farads

9. What single word added to this definition would make it much better? Current: the flow of matter past a designated point.

a. volume

b. power

c. rate

d. amount

10. What is the best definition of an amp?

a. a specific quantity of electrons

b. the speed electrons travel

c. a standard measure of electric current

d. a part of my stereo system

11. A coulomb is a standard volume of water.

a. True

b. False

12. Thinking of a hose, what defines the resistance?
    a. the length of the hose
    b. the width of the hose
    c. the amount the valve is opened
    d. the slope of the hose
13. Thinking of Ohm's law, V = IR, what happens when resistance increases and voltage stays the same?
    a. current decreases
    b. current increases
    c. inductance decreases
    d. impedance increases
14. Use Ohm's law to figure the current at the base of the night light transistor.

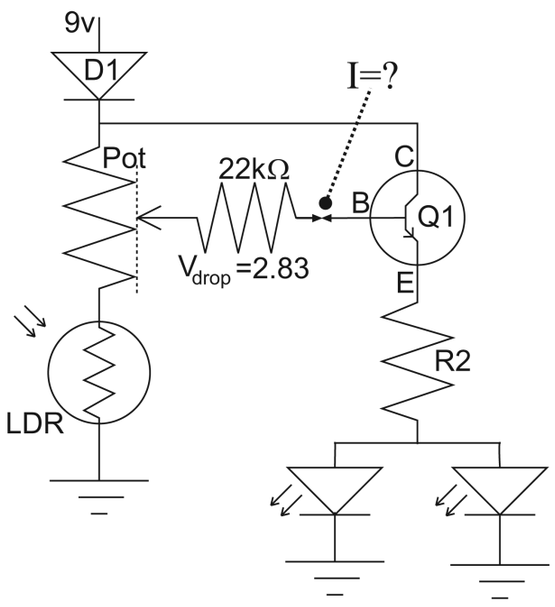

Figure A2-19

Known values R = 22 kΩ, V = 2.83v
    a. 777 amps
    b. 7.77 amps
    c. .129 amp
    d. .000129 amp

15. 0.23 A is how many mA?
    a. 2300 mA
    b. 230 mA
    c. 23.0 mA
    d. 2.30 mA

QUIZ Lesson 50

Defining Work, Force, and Power

1. What is the best definition of force?
    a. Force is energy exerted.
    b. Force is movement.
    c. Force is current.
    d. Force is coulombs per second.
2. In electricity, force is
    a. resistance
    b. inductance
    c. amperage
    d. voltage
3. The best definition of work is a force moving through a distance.
    a. True
    b. False
4. Units in which water current is measured are
    a. newton-meters per second
    b. joules per second
    c. cubic feet per second
    d. coulombs per second
5. Units in which electrical current is measured are
    a. I – impedance
    b. A – amperage
    c. C – current
    d. C – coulombs

6. What is the general definition of power?
   a. work/time
   b. force/time
   c. distance/time
   d. current/time
7. In electricity, power is defined as
   a. newton-meters per second
   b. coulombs per second
   c. joules per second
   d. cubic feet per second
8. 1 coulomb is
   a. 1 volt × 1 ohm
   b. a standard unit of electrons
   c. 1 watt
   d. 10,000,000,000,000,000,000,000,000 electrons
9. Two actions of the same voltage always have the same amount of power.
   a. True
   b. False
10. Two actions of the same current can have different power.
   a. True
   b. False
11. Use Ohm's law to figure current passing through R1. V = I × R

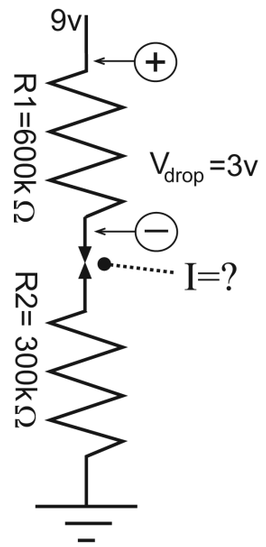

Figure A2-20

   a. I = .01 amp
   b. I = .1 amp
   c. I = 300 mA
   d. I = 900 mA
12. How much power is used at R1? P = V × I
   a. .03 W
   b. .30 W
   c. .90 W
   d. 2.0 W
13. The amount of current passing R1 is the same as current passing through R2.
   a. True
   b. False

QUIZ Lesson 51

What Do I Have to Gain?: Definitions

1. Why substitute fixed resistors in for the LDR and potentiometer?
   a. The LDR uses less power than the fixed resistors.
   b. The fixed resistors use less power than the LDR.
   c. The LDR offers reliability in resistance.
   d. The fixed resistors offer stability for the purpose of measuring.
2. What is the best definition of an amplifier?
   a. An amplifier takes a small signal and makes it louder.
   b. An amplifier creates gain.
   c. An amplifier creates an accurate large copy of a small signal.
   d. An amplifier creates big voltage output from small voltage input.
3. What is the best definition of the term gain?
   a. Gain is the ratio of output over input.
   b. Gain is the ratio of input over output.
   c. Gain is the ratio of V+ over V_{output}.
   d. Gain is the ratio of V+ over V_{input}.
4. State gain if the output was 450 mW and the input was 1.5 mW and V+ = 10 volts.
   a. 300
   b. .0033
   c. 22.2
   d. 666
5. I stands for what? _____
6. What unit is "gain" measured in?
   a. I
   b. g
   c. I(r)
   d. It doesn't have a unit.
7. What is 10 mV without the "milli"?
   a. .001 V
   b. .010 V
   c. .100 V
   d. 1.00 V
8. Current is measured in _____
9. What is the expected range for a working 3904 NPN transistor?

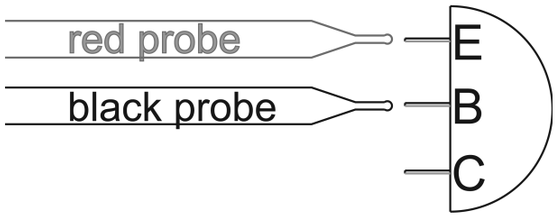

Figure A2-21

   a. 68 to 72
   b. 6.8 to 7.2
   c. .68 to .72
   d. .068 to .072
10. What is the formula for power?
   W = I R
   V = I R
   P = I V
   P = V over R

11. Finding the current through R1 will also define current for R2 and LED.

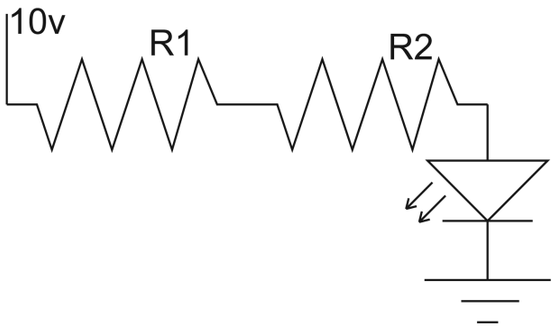

Figure A2-22

a. True

b. False

12. P stands for _____.

13. Amps is abbreviated as _____.

14. Refer to Figure A2-22. Finding the power through R1 will also define power for R2 and LED.

a. True

b. False

15. Watts is abbreviated as _____.

16. The total power used by this circuit (Figure A2-22) can be found by adding together the power used by each of the components.

a. True

b. False

QUIZ Lesson 52

The World Is Analog, so Analog Is the World

1. The best definition of an inverting amplifier is

a. when input signal increases, the output signal increases

b. when input resistance increases, the output resistance increases

c. when input signal decreases, the output signal increases

d. when input resistance decreases, the output resistance decreases

2. What is the best definition of a noninverting amplifier?

a. when input signal increases, the output signal increases

b. when input signal decreases, the output signal increases

c. when input resistance increases, the output resistance increases

d. when input resistance decreases, the output resistance decreases

3. The PNP transistors act as

a. inverting amplifiers

b. noninverting amplifiers

c. inverting Op Amps

d. noninverting Op Amps

4. What is the best definition of the term gain?

a. Gain is the ratio of V+ over V_{output}.

b. Gain is the ratio of V+ over V_{input}.

c. Gain is the ratio of output over input.

d. Gain is the ratio of input over output.

5. Gain is never a negative value.

a. True

b. False

6. The LM741 is
   a. digital logic
   b. transistor
   c. inverting resistor
   d. an Op Amp
7. The LM 741 is able to take positive and negative voltage.
   a. True
   b. False
8. The LM741 typically draws how much current?
   a. 1.7 watts
   b. .17 amps
   c. .0017 amps
   d. 1.7 mW
9. The LM741 has how many transistors inside the chip?
   a. 5
   b. 20
   c. 50
   d. 100

QUIZ Lesson 53

Alternating Current Compared with Direct Current

1. What is the main difference between alternating current and direct current?
   a. DC has only positive voltage; AC has both positive and negative voltage.
   b. AC has V+ and V– at the same time.
   c. AC has positive and negative electrons; DC has only positive electrons.
   d. In DC the current moves in only one direction; In AC the current moves both ways.
2. Negative direct voltage has current moving opposite relative to positive DC voltage.
   a. True
   b. False
3. In a DC system, negative voltage is _____ ground.
   a. above
   b. below
4. Consider negative voltage. Ground has more energy than –9 volts.
   a. True
   b. False
5. Current in V+ flows towards ground.
   a. True
   b. False
6. Current in V– flows towards ground.
   a. True
   b. False
7. Positive 4 volts has the same energy as negative 4 volts, but is pushing in the opposite direction.
   a. True
   b. False
8. You cannot measure VAC when the multimter is set to VDC because
   a. VAC measures only a part of the DC signal.
   b. An AC signal averages to zero volts DC.
   c. DC measures V+ only. AC measures V+ and V–.
   d. DC measures only half of the AC voltage.

9. You cannot measure VDC when the DMM is set to VAC because
   a. The DMM measures VAC fluctuations around a reference point, and VDC doesn't fluctuate.
   b. The multimeter isn't fast enough.
   c. DC signal averages to 0.0 volts in an AC environment.
   d. VDC measures only part of the AC signal.
10. The reference of an AC signal is its center line.
   a. True
   b. False
11. The natural center of an AC signal is 0.0 volts.
   a. True
   b. False
12. Each point represents energy (voltage) of an electron's movement in a wire. What needs to be done to change this representation into a sine wave?

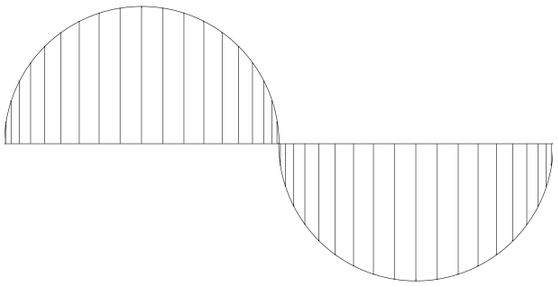

Figure A2-23

   a. Reduce the voltage.
   b. Space the measurements out into regular time units.
   c. Average the voltage.
   d. Change the settings on the scope.

13. The standard sine wave represents the regular change of electron movement between V+ and V–.
   a. True
   b. False
14. Which represents V–?

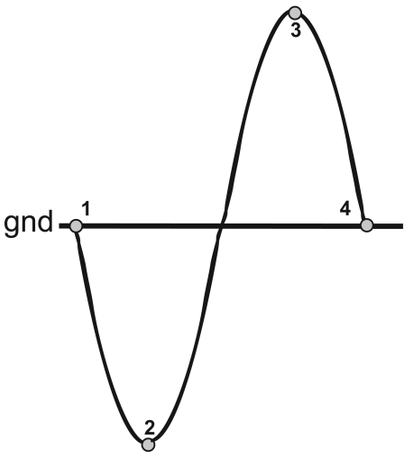

Figure A2-24

   a. position 1
   b. position 2
   c. position 3
   d. position 4
15. Which position has the most energy?

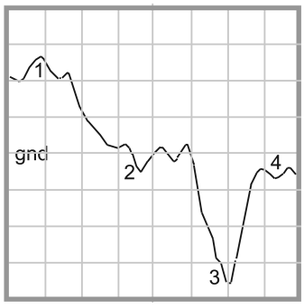

Figure A2-25

   a. position 1
   b. position 2
   c. position 3
   d. position 4

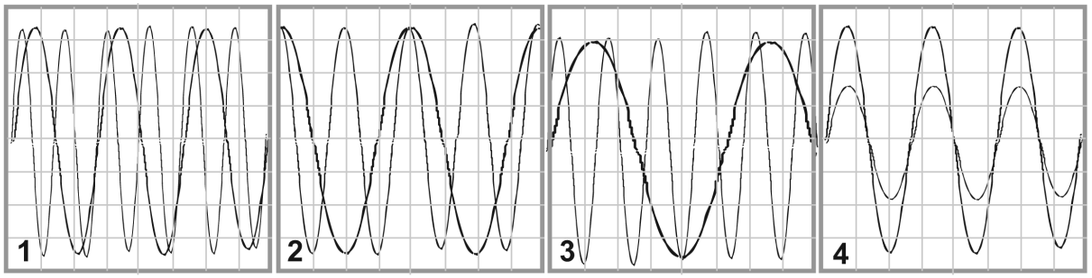

Figure A2-26

16. Using graphics of the scope screen, what best shows the relation of the 450 Hz to the 1000 Hz drawing (Figure A2-26)?
    a. picture 1
    b. picture 2
    c. picture 3
    d. picture 4
17. Refer to Figure A2-26. Comparing the two input signals on the scope, what was the difference in amplitude between the 250 mV and 50 mV signals?
    a. picture 1
    b. picture 2
    c. picture 3
    d. picture 4

QUIZ Lesson 54
AC in a DC Environment

1. The natural center of an AC signal is ground.
    a. True
    b. False
2. What tool is used to create an adjusted reference?
    a. oscilloscope
    b. voltage divider
    c. DMM
    d. screwdriver
3. AC can't exist in DC without adjusting the reference.
    a. True
    b. False
4. The AC signal is used to
    a. produce a sine wave
    b. control the speaker
    c. carry analog information
    d. produce a signal
5. If an AC signal was fed directly into a DC system, the resulting output would look like what (Figure A2-27)?

Figure A2-27

6. Voltage reference at pin 3 is equal to half of V+.
   a. True
   b. False
7. The negative sign represents

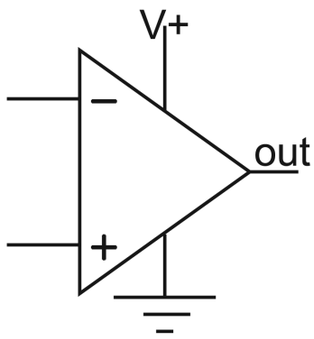

Figure A2-28

   a. pin 2
   b. the negative input
   c. V– input
   d. inverting input
8. Voltage reference at pin 3 creates an adjusted ground for DC.
   a. True
   b. False
9. Why set the reference to half of V+ DC?
   a. This setup gives the most room for the AC signal.
   b. This provides the easiest method to use the voltage divider.
   c. The Op Amp can't work any other way.
   d. This adjusts the reference point so DC works with an artificial ground.
10. The Op Amp's output reacts to the difference between the inverting input and noninverting input.
   a. True
   b. False
11. What is the best definition of negative voltage?
   a. voltage that is moving opposite to positive voltage
   b. voltage that uses 0.0 volts as reference
   c. voltage that doesn't have any real power
   d. the voltage below the adjusted reference point
12. What is the best definition of alternating current?
   a. In DC the current moves in only one direction; in AC the current moves both ways.
   b. AC has V+ and V– at the same time.
   c. AC has positive and negative electrons; DC has only positive electrons.
   d. DC has only positive voltage; AC has both positive and negative voltage.
13. Why does VAC read as 0.0 when read on VDC setting?
   a. VDC measures only a part of the AC signal.
   b. DC measures V+ only. AC measures V+ and V–.
   c. DC measures only half of the AC voltage.
   d. An AC signal averages to zero volts DC.

14. What is the expected output of the voltage comparator when inverting input = noninverting input?

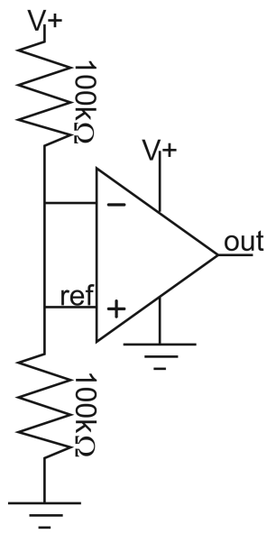

Figure A2-29

a. output = ground

b. output = reference

c. reference = ground

d. signal in = signal out

15. What is the best definition of the voltage comparator?

a. It compares two voltages and amplifies the difference.

b. It compares the inverting input to the reference voltage and acts like a digital gate, giving Hi or Lo.

c. It compares the noninverting input to V+ and amplifies that signal.

d. It compares the two input voltages and controls the gain from the input.

16. What is the output of the voltage comparator when the inverting input is not equal to the noninverting input?

a. The output always swings to the extreme opposite of the percieved Hi/Lo input.

b. Output becomes half of V+ when voltage inputs are not equal.

c. Output becomes ground to indicate unequal voltage inputs.

d. Output always swings to V+ to indicate unequal voltages.

17. The voltage comparator has an action similar to what digital gate?

a. NOT gate

b. AND gate

c. NAND gate

d. OR gate

e. Nor gate

QUIZ Lesson 56

Using Feedback to Control Gain

1. Why is the audio coupler vital?

a. Isolates the Op Amp circuit from the signal

b. Used to separate AC signal from DC carrier

c. Couples sections of the Op Amp to the signal

d. Connects the reference to the audio input

2. Gain is the ratio of

a. voltage in to voltage out

b. R3 to R4

c. signal in to signal out

d. signal out to signal in

3. What is the best definition of feedback? The signal is routed back to
   a. the audio coupler to control input
   b. the inverting output to control gain
   c. control reference voltage
   d. adjust the audio coupler
4. What is the gain shown in this setup?

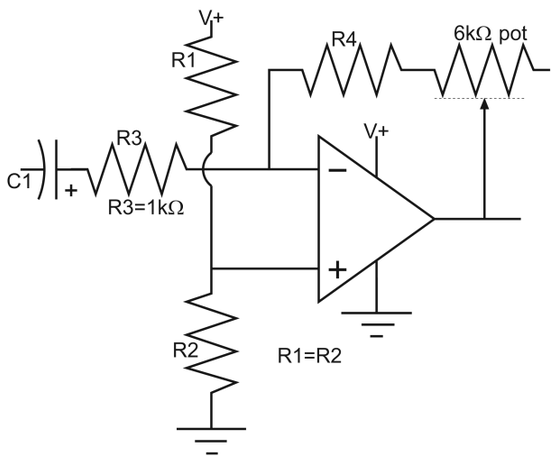

Figure A2-30

   a. $\text{gain} = \dfrac{R4}{R3}$
   b. $\text{gain} = \dfrac{Pot - R4}{R3}$
   c. $\text{gain} = \dfrac{Pot}{R3}$
   d. $\text{gain} = \dfrac{Pot + R4}{R3}$
5. In the previous illustration, what happens as you increase the potentiometer value?
   a. increase feedback and increase volume
   b. increase feedback and decrease volume
   c. decrease feedback and increase volume
   d. decrease feedback and decrease volume
6. Instant feedback of the inverted output actually cancels part of the input signal.
   a. True
   b. False
7. By controlling the size of the feedback, you control the volume.
   a. True
   b. False
8. To test 0.0 VAC input, leaving the input disconnected is the same as having an input of 0.0 mVAC.
   a. True
   b. False
9. The best measurement of VAC in the system is from the point of interest to
   a. reference
   b. ground
   c. input
   d. V+
10. Any AC measure with the black probe to ground in this system will give an erroneous measurement because
    a. AC is referenced to ground
    b. DC is referenced to pin 3
    c. AC is referenced to the noninverting input
    d. the DC reference is the inverting input
11. Invert means to
    a. subtract
    b. divide
    c. copy backwards
    d. turn upside down

QUIZ Lesson 57

Building a Power Amplifier Controlled by an Op Amp

1. A pre amp is an amplifier that boosts the signal to a useful voltage level so it can be used by the power amplifier.
   a. True
   b. False
2. A power amplifier adds current to an AC signal.
   a. True
   b. False
3. What type of component is used here as the heart of the power amplifier?
   a. transformer
   b. LM 741 IC
   c. potentiometer
   d. transistor
4. When you boost the voltage, you automatically boost power.
   a. True
   b. False
5. The LM741 is a power amplifier.
   a. True
   b. False
6. The 3904 and 3906 act as power amplifiers because a small amount of current and voltage is used to control a large current and voltage change.
   a. True
   b. False
7. Amperage × Voltage = Watts
   a. True
   b. False
8. What is the maximum gain in this circuit?

   _____
9. If the gain is 10 and 40 mvAC at .1 amp is applied to the input, the output would be
   a. .44 watt
   b. 4.4 mW
   c. 44 mW
   d. 440 mW
10. What is the purpose of C2, the buffer capacitor?
    a. It provides extra power to the power supply.
    b. It smoothes out the power supply current.
    c. It acts as a reservoir voltage for the power supply.
    d. It preserves the Op Amp power supply.
11. Any size capacitor would be effective for use as a buffer.
    a. True
    b. False
12. The circuit still works with C3 removed. C3 is just added as insurance.
    a. True
    b. False
13. A short is when a “shortcut” is given for current to travel, missing part of a circuit.
    a. True
    b. False

QUIZ Lesson 59
Using the Speaker as a Microphone

1. Whistling into the speaker creates a voltage output in the range of
   a. 5 mvAC
   b. 25 mvAC
   c. 50 mvAC
   d. 100 mvAC
2. Identify the whistle as it appears on the scope screen (Figure A2-31).
   a. picture 1
   b. picture 2
   c. picture 3
   d. picture 4
3. Speakers are good microphones.
   a. True
   b. False
4. The coil on a speaker becomes an electromagnet when current moves through the wire.
   a. True
   b. False
5. As you increase the gain, how does the signal on the scope change?

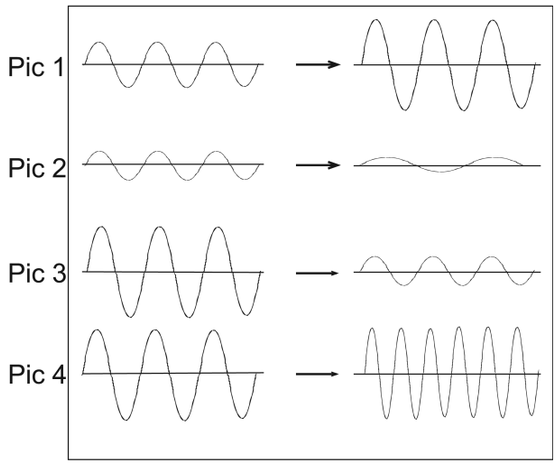

Figure A2-32

   a. picture 1
   b. picture 2
   c. picture 3
   d. picture 4

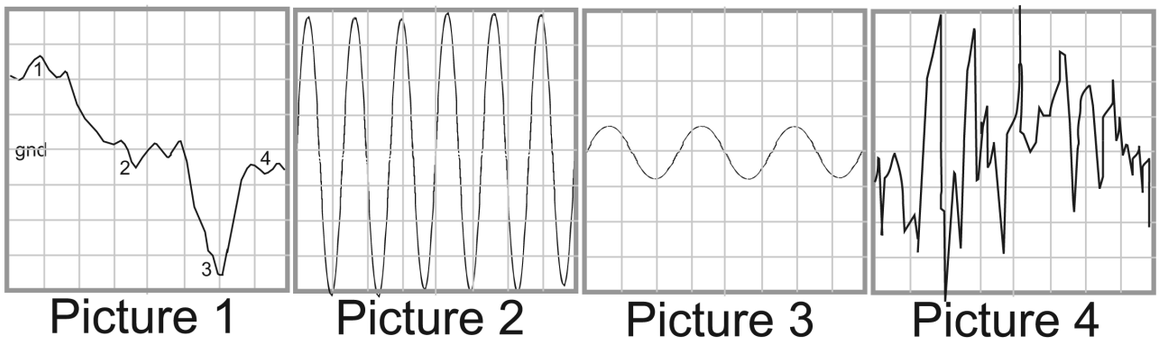

Figure A2-31

QUIZ Lesson 60

Introducing Transformers and Putting It All Together

1. The side of the transformer with less resistance has fewer windings.
   a. True
   b. False
2. The primary-to-secondary ratio for this audio transformer is closest to
   a. 1:10
   b. 1:15
   c. 1:30
   d. 1:50
3. The ratio of voltage change is directly proportional to the ratio of windings.
   a. True
   b. False
4. The audio transformer is a
   a. step-down transformer
   b. step-up transformer
5. What transfers the energy between the two coils?
   a. moving electrons
   b. magnetic fields
   c. flux capacitance
   d. magic
6. A transformer changes power to voltage.
   a. True
   b. False
7. We are using the audio transformer here to increase the
   a. power
   b. current
   c. response
   d. voltage
8. Regarding the audio transformer, an input signal of 5 mvAC to the primary gives what result?
   a. 230 mW output
   b. 230 mA output
   c. 230 mV output
   d. 230 mΩ output
9. You know the audio transformer is broken if a signal was fed to the primary and no noise came out.
   a. True
   b. False
10. A wall adapter provides 9 volts. You know the transformer has a winding ratio primary:secondary of
    a. 9:120
    b. 120:9

Answer Key

Lesson 2

1. a
2. b
3. a
4. c
5. a
6. d

Lesson 3

1. d
2. a
3. c
4. b
5. c
6. a
7. c
8. a
9. a
10. a
11. b
12. d
13. b
14. c

Lesson 4

1. a
2. a
3. b
4. d
5. d
6. d
7. b
8. b
9. a
10. a
11. b
12. a

Lesson 5, 6, and 7

1. d
2. d
3. a
4. b
5. d
6. b
7. a
8. b
9. any
10. a
11. b

Lesson 8

1. b
2. c
3. b
4. c
5. c
6. b
7. b
8. a
9. a
10. c
11. a
12. d

Lesson 9

1. a
2. a
3. a
4. d
5. b
6. a
7. b
8. d
9. a

Lesson 10

1. b
2. a
3. a
4. d
5. c
6. b
7. a
8. b
9. b
10. b

Lesson 13

1. a
2. c
3. a
4. a
5. b
6. c
7. a
8. c

Lesson 15

1. c
2. a
3. c
4. a
5. b
6. b

Lesson 16

1. b
2. d
3. b
4. a
5. b
6. a
7. a
8. a
9. a
10. c
11. b
12. a

Lesson 17

1. a
2. c
3. b
4. b
5. c
6. b
7. a
8. c
9. c
10. a

Lesson18

1. a
2. b
3. d
4. b
5. b
6. d
7. a

Lesson 19

1. a
2. a
3. a
4. b

Lesson 20

1. a
2. b
3. b
4. d
5. b

Lesson 21

1. d
2. c
3. b
4. c
5. a
6. b
7. c
8. c
9. c
10. c

Lesson 22

1. b
2. d
3. a
4. b
5. a
6. a
7. d
8. a
9. b
10. a

Lesson 23

1. b
2. b
3. a
4. b
5. b
6. a
7. a
8. a
9. a
10. a
11. b
12. a
13. b
14. d
15. b
16. a

Lesson 25

1. a
2. d
3. b
4. a
5. a
6. a
7. c
8. b
9. c
10. b

Lesson 27

1. a
2. c
3. d
4. a
5. c
6. b
7. a
8. b
9. b
10. a
11. b
12. b
13. b

Lesson 28

1. a
2. b
3. a
4. b
5. c
6. d
7. a
8. a

Lesson 31

1. a
2. b
3. a
4. a
5. a
6. d
7. b
8. a

Lesson 32

1. a
2. b
3. d
4. b
5. a
6. b
7. a
8. c
9. b
10. c
11. c

Lesson 38

1. c
2. d
3. 8.0 v – 3.5 v = 4.5 v
4. c
5. c
6. b
7. a
8. c
9. d

Lesson 39

1. b
2. a
3. b
4. d
5. b
6. a
7. d
8. d
9. a
10. d
11. b
12. a
13. a
14. b
15. b
16. a
17. b

Lesson 40

1. a
2. b
3. d
4. d
5. d
6. c
7. d
8. d
9. a
10. a

Lesson 41

1. a
2. b
3. b
4. b
5. b
6. b
7. a
8. c
9. d
10. d

Lesson 42

1. a
2. a
3. b
4. b
5. a
6. c
7. a
8. c
9. d
10. b

Lesson 44

1. a
2. b
3. c
4. "5"
5. b
6. a
7. b
8. c
9. c
10. a
11. d
12. c

Lesson 45

1. b
2. a
3. c
4. d
5. a
6. c
7. b
8. b
9. c
10. b
11. a
12. b
13. b

Lesson 49

1. b
2. d
3. a
4. a
5. b
6. a
7. d
8. a
9. c
10. c
11. b
12. b
13. a
14. d
15. b

Lesson 50

1. a
2. d
3. a
4. c
5. b
6. a
7. b
8. b
9. b
10. a
11. a
12. a
13. a

Lesson 51

1. d
2. c
3. a
4. a
5. current
6. d
7. b
8. amp
9. c
10. watt
11. c
12. power
13. a
14. power

15. a
16. b

Lesson 52

1. c
2. a
3. a
4. c
5. a
6. d
7. a
8. c
9. b

Lesson 53

1. d
2. a
3. b
4. b
5. a
6. a
7. a
8. b
9. a
10. a
11. a
12. b
13. a
14. b
15. c
16. b
17. d

Lesson 54

1. a
2. b
3. a
4. c
5. b
6. a
7. d
8. b
9. a
10. a
11. a
12. a
13. d
14. b
15. b
16. a
17. a

Lesson 56

1. b
2. d
3. b
4. d
5. c
6. a
7. a
8. b
9. a
10. c
11. d

Lesson 57

1. a
2. a
3. d
4. b
5. b
6. a
7. a
8. 11
9. c
10. c
11. b
12. b
13. b

Lesson 59

1. a
2. c
3. b
4. a
5. a

Lesson 60

1. a
2. d
3. a
4. b
5. b
6. b
7. d
8. c
9. b
10. b